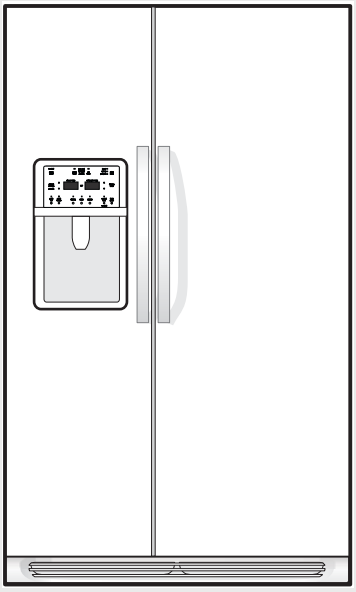

FRIGIDAIRE

Factory Parts Catalog

Product No.	FGHC2342LF0	FGHC2342LF1	FGHC2342LF2
Series	Gallery	Gallery	Gallery
Color	stainless	stainless	stainless
Volts	115	115	115
Owner's Guide	242108501	242108501	242108501
Market	North America	North America	North America
Energy Guide	242110271	242110271	242110271
Service Data Sheet	240389641	240389641	240389641
Installation Instructions	241811505	241811505	241811505

Frigidaire
P.O. BOX 8020
CHARLOTTE, NC 28262

SIDE-BY-SIDE REFRIGERATOR

Model No.
FGHC2342L

Publication No.
5995587317
11/02/16
(EN/SERVICE/KHB)
137

FREEZER DOOR

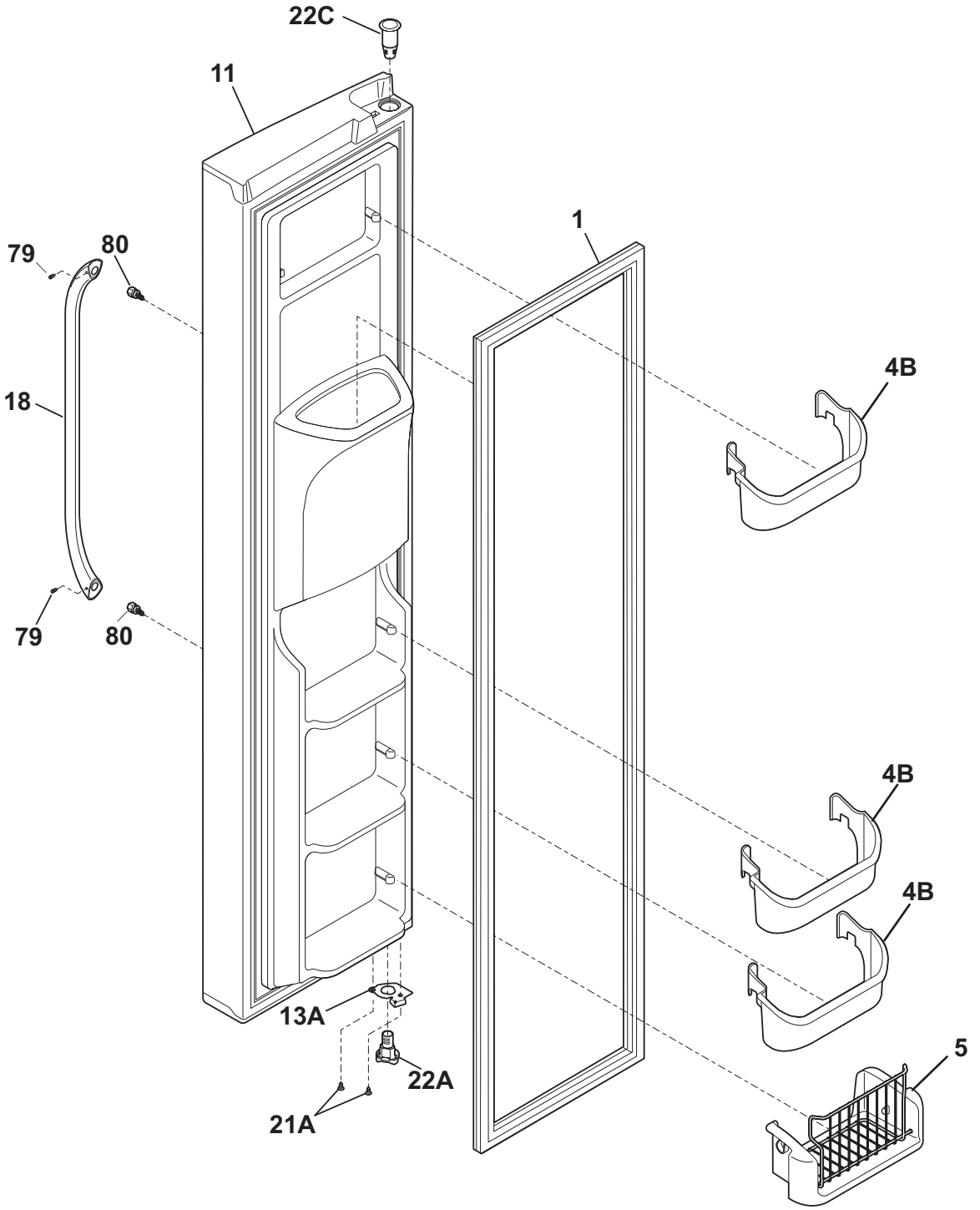

F58FUDCFC0

FREEZER DOOR

Model Index: A FGHC2342L (FGHC2342LF0)
B FGHC2342L (FGHC2342LF1)
C FGHC2342L (FGHC2342LF2)

POS. NO	PART NO.				DESCRIPTION
1 #	241510204	A	B	C	Gasket-frzr door, black, magnetic
4B	241511602	A	B	C	Bin-door
5	241545001	A	B	C	Bin-tilt out, tilt-out
11	241993807	A	B	C	Door-frzr, stainless, complete assy
13A	241942604	A	B	C	Door Stop, black, frzr
18	241930101	A	B	C	Handle-door, stainless
21A	240442706	A	B	C	Screw-#10-32 X 3/4, zinc
22A	241990302	A	B	C	Bearing-hinge(frz), closer
22C	241760402	A	B	C	Bearing, hinge, top
79	218755405	A	B	C	Screw-set, 10-32 x 0.650
80	218755504	A	B	C	Screw-shoulder, #10 AB, handle mounting
*	240451503	A	B	C	Screw, ind hex wshr hd, 8-32 x 0.375, trilobe
*	242103001	A	B	C	Connector-water, straight
* #	241834703	A	B	C	Harness-wiring, door
*	5303918371	A	B	C	Dispenser heater kit, 115

Functional Parts
* Non-Illustrated Parts

REFRIGERATOR DOOR

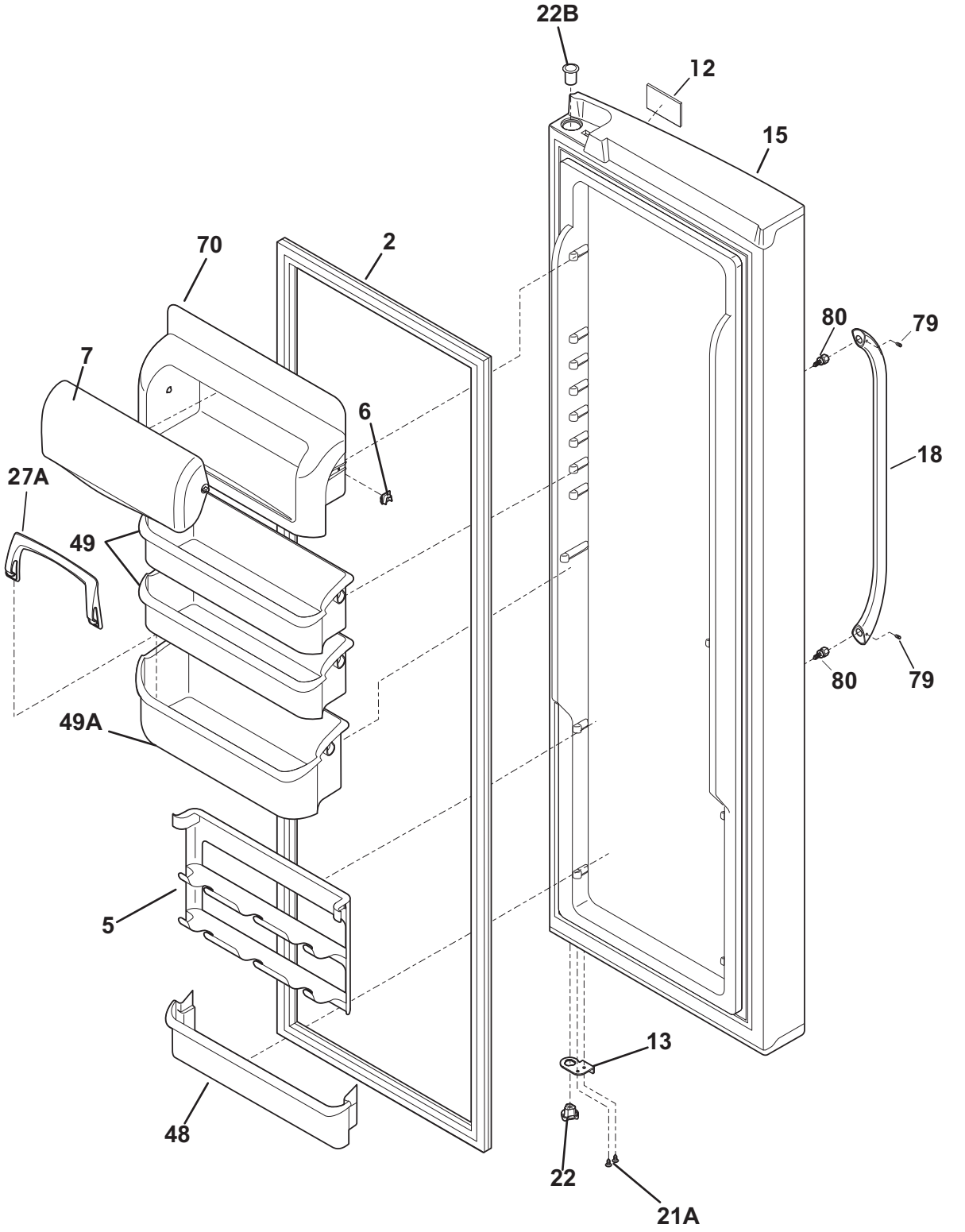

F58RUDCHA1

REFRIGERATOR DOOR

Model Index: A FGHC2342L (FGHC2342LF0)
B FGHC2342L (FGHC2342LF1)
C FGHC2342L (FGHC2342LF2)

POS. NO	PART NO.				DESCRIPTION
2 #	241510203	A	B	C	Gasket-refr door, black, magnetic
5	241516102	A	B	C	Rack-can
6	241515901	A	B	C	Lug-dairy compartment
7	241515601	A	B	C	Door-dairy
12	242015201	A	B	C	Label-nameplate
13	241942603	A	B	C	Door Stop, black, ref
15	241837282	A	B	C	Door-refr, stainless, complete assy
18	241930101	A	B	C	Handle-door, stainless
21A	240442706	A	B	C	Screw-#10-32 X 3/4, zinc
22	241990301	A	B	C	Bearing-hinge, gray
22B	241760404	A	B	C	Bearing, hinge, top
27A	240396102	A	B	C	Retainer, tall bottle
48	241511701	A	B	C	Bin-door, ref
49	241505301	A	B	C	Bin-door, 2-liter
49A	241505501	A	B	C	Bin-door, gallon
70	241515801	A	B	C	Compartment-dairy, removable
79	218755405	A	B	C	Screw-set, 10-32 x 0.650
80	218755504	A	B	C	Screw-shoulder, #10 AB, handle mounting

Functional Parts
* Non-Illustrated Parts

CABINET

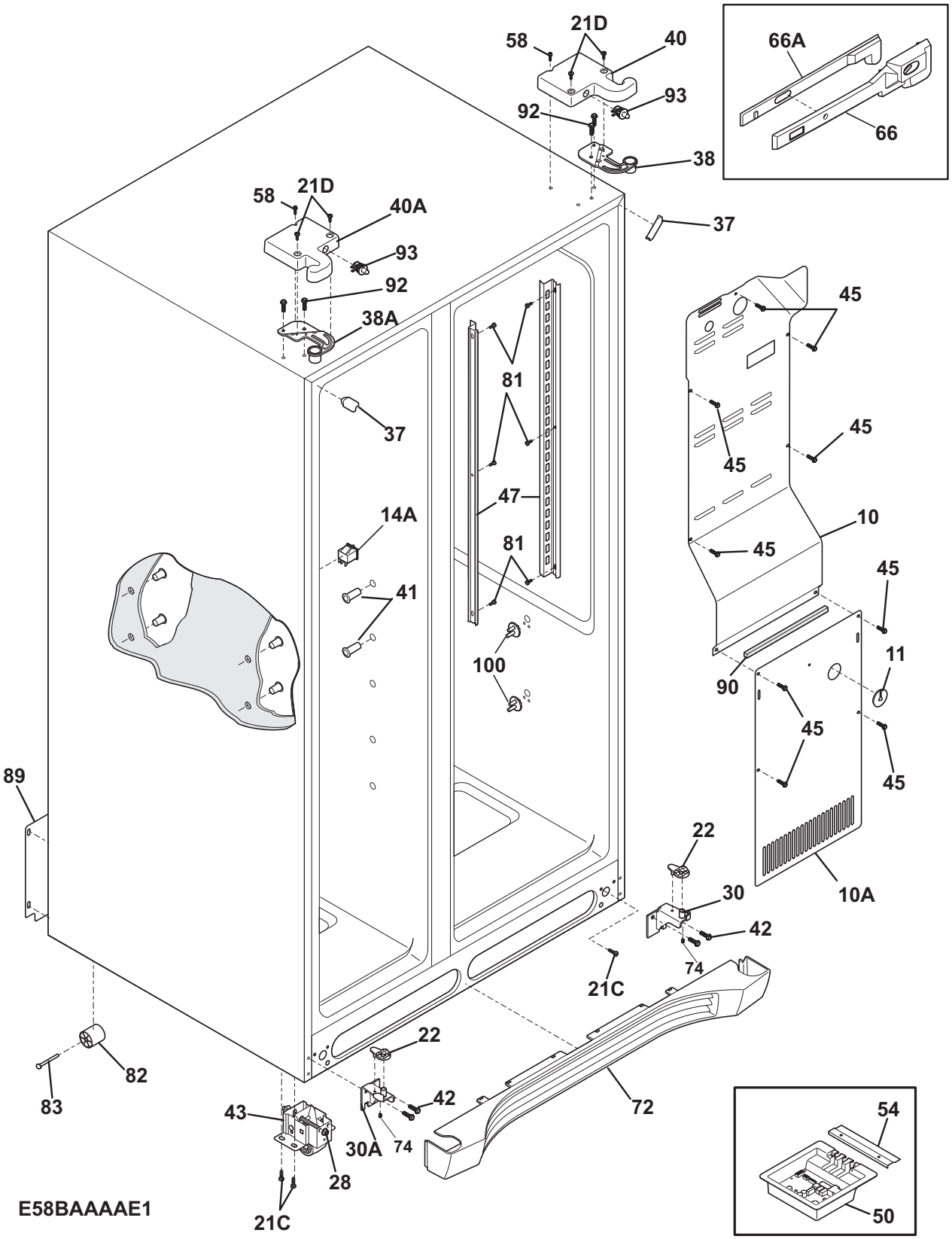
58
21D
40
93
92
38
66A
66
58
21D
40A
93
92
38A
37
37
45
45
45
81
47
14A
81
41
100
10
45
45
11
90
45
45
89
22
30
42
74
10A
21C
22
82
83
42
43
30A
74
28
21C
72
54
50
E58BAAAAE1

CABINET

Model Index: A FGHC2342L (FGHC2342LF0)
B FGHC2342L (FGHC2342LF1)
C FGHC2342L (FGHC2342LF2)

POS. NO	PART NO.				DESCRIPTION
10	241509804	A	B	C	Cover-air duct
10A	241719711	A	B	C	Cover-evap coil, lower
11	5303208309	A	B	C	Plug-hole, factory test
14A#	241547901	A	B	C	Switch-light/lamp, frzr door
21C	218252201	A	B	C	Screw, #8 truss hd, 10-32CA x 0.500
21D	241548003	A	B	C	Screw, 10-32 x 3/8
22	241917801	A	B	C	Plate-door closer
28	240335502	A	B	C	Bolt-roller adj, hex washer head, 1/4-20 x 4.020, (2), special
30	241917901	A	B	C	Bracket-lower hinge, RH, w/hinge pin
30A	241917902	A	B	C	Bracket-lower hinge, LH, w/hinge pin
37	240337610	A	B	C	Trim-cabinet corner, black, (2)
38	241761301	A	B	C	Bracket-upper hinge, RH
38A	241761302	A	B	C	Bracket-upper hinge, LH
40	241946705	A	B	C	Cover-upper hinge, black, RH
40*	241835801	A	B	C	Harness-wiring
40A	241946706	A	B	C	Cover-upper hinge, black, LH
40A*	241891901	A	B	C	Harness-wiring, freezer
41	241550801	A	B	C	Grommet-shelf mtg, 1.40" long
41*	241550701	A	B	C	Grommet-shelf mtg, .96" long
42	240578902	A	B	C	Screw, hex head, 1/4-20 x 5/8
43	240335006	A	B	C	Roller Assy, front, (2)
45	241500303	A	B	C	Screw, hex washer head, 8-18AB x 1/2
47	241513001	A	B	C	Channel-shelf mtg, side, (2)
50	242009034	A	B	C	Board-main power
50*	241852501	A	B	C	Clip, wiring harness
54	241532401	A	B	C	Channel
58	218781101	A	B	C	Screw, pan head, 8-18 x 0.625
66	241861301	A	B	C	Housing-damper
66*	240346703	A	B	C	Tape-foam
66A	241861201	A	B	C	Slide-damper, meat pan
72	241969405	A	B	C	Grille/Kickplate
74	218755402	A	B	C	Screw-set, 10-32 x 0.375
81	5304455650	A	B	C	Screw, hex washer head, 8-15A x 0.625, Low Profile
82	5304418225	A	B	C	Roller, compressor base, rear, (2)
83	5304455655	A	B	C	Rivet, flat head, 1/4 OD x 1-3/4, roller pin
89	241733902	A	B	C	Cover-access, w/label
90	218249808	A	B	C	Seal-coil cover
92	241710601	A	B	C	Screw, hex washer hd, 1/4 x 7/8, hinge mtg
93	241911704	A	B	C	Switch, plunger style
100	241993101	A	B	C	Support-crisper cvr
100*	241993001	A	B	C	Support-crisper cvr
*	240479601	A	B	C	Plug, button, cab liner holes
*	241781601	A	B	C	Seal-return air
*	241890601	A	B	-	Louver, air supply, crisper
*	241890604	-	-	C	Louver, air supply, crisper
*	242125401	-	-	C	Scoop, air
*	242125501	-	-	C	Insulator, damper
*	5303321321	A	B	C	Paint, touch-up, black

Functional Parts
* Non-Illustrated Parts

SHELVES

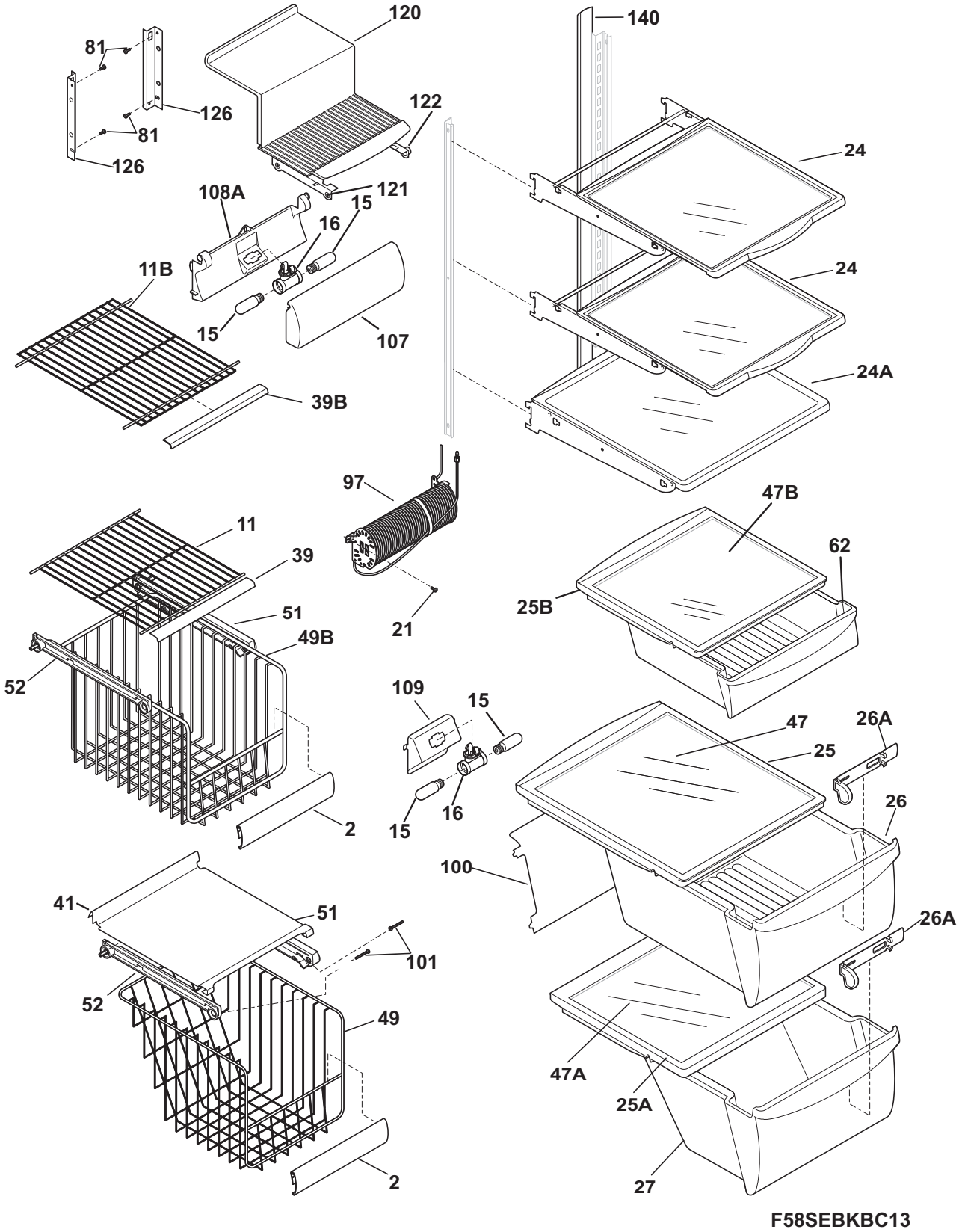
120
140
81
126
122
81
126
24
108A
121
15
16
11B
24
15
107
24A
39B
97
47B
11
62
39
25B
51
21
49B
52
109
15
47
26A
25
26
15
16
2
100
41
51
26A
101
52
49
47A
25A
2
27
F58SEBKBC13

SHELVES

Model Index: A FGHC2342L (FGHC2342LF0)
B FGHC2342L (FGHC2342LF1)
C FGHC2342L (FGHC2342LF2)

POS. NO	PART NO.				DESCRIPTION
2	241510608	A	B	C	Trim-basket
11	241657605	A	B	C	Shelf-freezer, flip-up
11B	241657506	A	B	C	Shelf-freezer, fixed wire
15	241552801	A	B	C	Light Bulb
16	241622802	A	B	C	Socket-light, frz light
16*	240570304	A	B	C	Tape, aluminum, 3" wide
16*	241987601	A	B	C	Harness-wiring
21	5304455658	A	B	C	Screw, hx wshr hd sems, 8-15A x 0.625
24	240350137	A	B	C	Shelf-"Spill-Safe", cantilver, sliding
24A	240355260	A	B	C	Shelf-"Spill-Safe", fixed
25	240599301	A	B	C	Cover-crisper pan, upper
25*	240362101	A	B	C	Clip-slide, cover-crisper
25A	240350903	A	B	C	Cover-crisper pan, lower
25B	240599803	A	B	C	Frame-deli cover, upper
26	240351061	A	B	C	Pan-crisper, upper
26*	240349801	A	B	C	Clip-slide, pan-crisper
26*	241595202	A	B	C	Clip-slide, pan-crisper
26A	240362201	A	B	C	Control-humidity
27	240351240	A	B	C	Pan-crisper, lower
39	240430709	A	B	C	Trim-shelf, 11.60", front
39B	240430710	A	B	C	Trim-shelf, 12.86", front
41	241637601	A	B	C	Baffle-air
47	240350649	A	B	C	Insert-pan cover, glass
47A	240350603	A	B	C	Insert-pan cover, glass
47B	240443391	A	B	C	Insert-pan cover, glass
49	241515001	A	B	C	Basket-sliding
49B	241514901	A	B	C	Basket-sliding, upper, full
51	241514501	A	B	C	Hanger-basket, RH
52	241514601	A	B	C	Hanger-basket, LH
62	241974601	A	B	C	Pan-meat
81	5304455650	A	B	C	Screw, hex washer head, 8-15A x 0.625, Low Profile
97	241532007	A	B	C	Water Tank
100	240326304	A	B	C	Cover-water tank
101	218493101	A	B	C	Screw, hex washer head, 8-18AB x 1-3/4
107	241753601	A	B	C	Shield-light, upper
108A	241753701	A	B	C	Housing-light, upper, fresh food
109	241513202	A	B	C	Base-crisper light socket
120	241691701	A	B	C	Shelf-ice cream
121	241504701	A	B	C	Rail-ice cream shelf, LH
122	241504702	A	B	C	Rail-ice cream shelf, RH
126	241674401	A	B	C	Channel, auger mtg, LH
126	241674402	A	B	C	Channel, auger mtg, RH
140	241812502	A	B	C	Channel, wtr tube cover
*	242110271	A	B	C	Energy Guide

CONTROLS

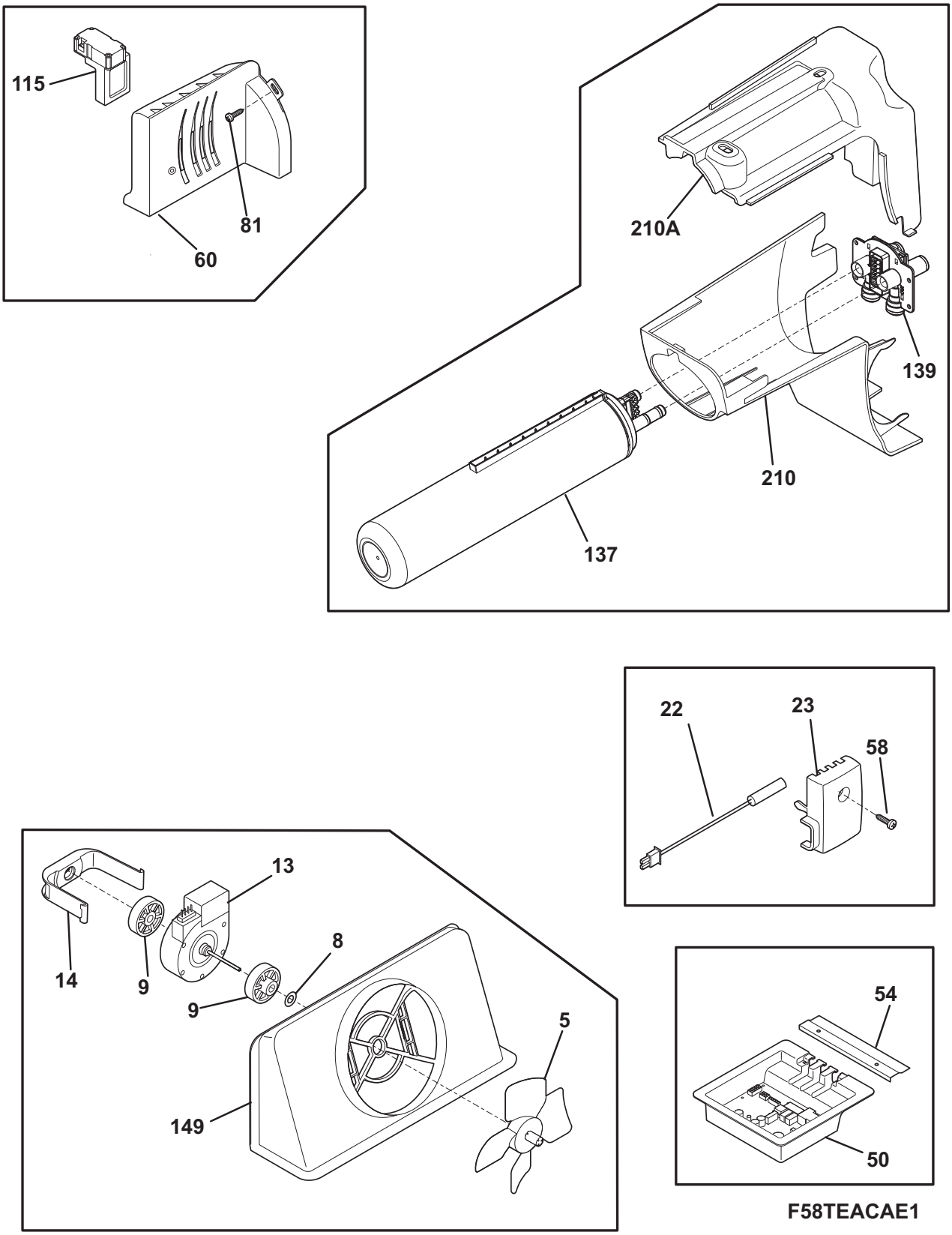

F58TEACAE1

CONTROLS

Model Index: A FGHC2342L (FGHC2342LF0)
B FGHC2342L (FGHC2342LF1)
C FGHC2342L (FGHC2342LF2)

POS. NO	PART NO.				DESCRIPTION
5	5308000010	A	B	C	Fan Blade, red, evaporator fan
8	215474201	A	B	C	Washer, "slinger", nylon, evap fan shaft
9	241518301	A	B	C	Bushing, motor mounting
13	241509402	A	B	C	Motor, evaporator fan
14	241517701	A	B	C	Clip, evap fan motor
22	240597203	A	B	C	Sensor
23	241845401	A	B	C	Housing-sensor
50	242009034	A	B	C	Board-main power
50*	241852501	A	B	C	Clip, wiring harness
54	241532401	A	B	C	Channel
58	5304455650	A	B	C	Screw, hex washer head, 8-15A x 0.625, Low Profile
60	241755401	A	B	C	Diffuser-air
60*	241755501	A	B	C	Insulation-air duct
81	5304455658	A	B	C	Screw, hx wshr hd sems, 8-15A x 0.625
115	241853801	A	B	C	Damper Assy, w/seal
137	241791601	A	B	C	Filter-water, carbon
139	242009601	A	B	C	Base-water filter
149	241517601	A	B	C	Shroud-evap fan mtg
149*	241528304	A	B	C	Seal, foam, evap fan assy
210	241983802	A	B	C	Housing-water filtr
210A	241998302	A	B	C	Mount-water filter
*	3205266	A	B	C	Edge Protector, wiring harness

SYSTEM

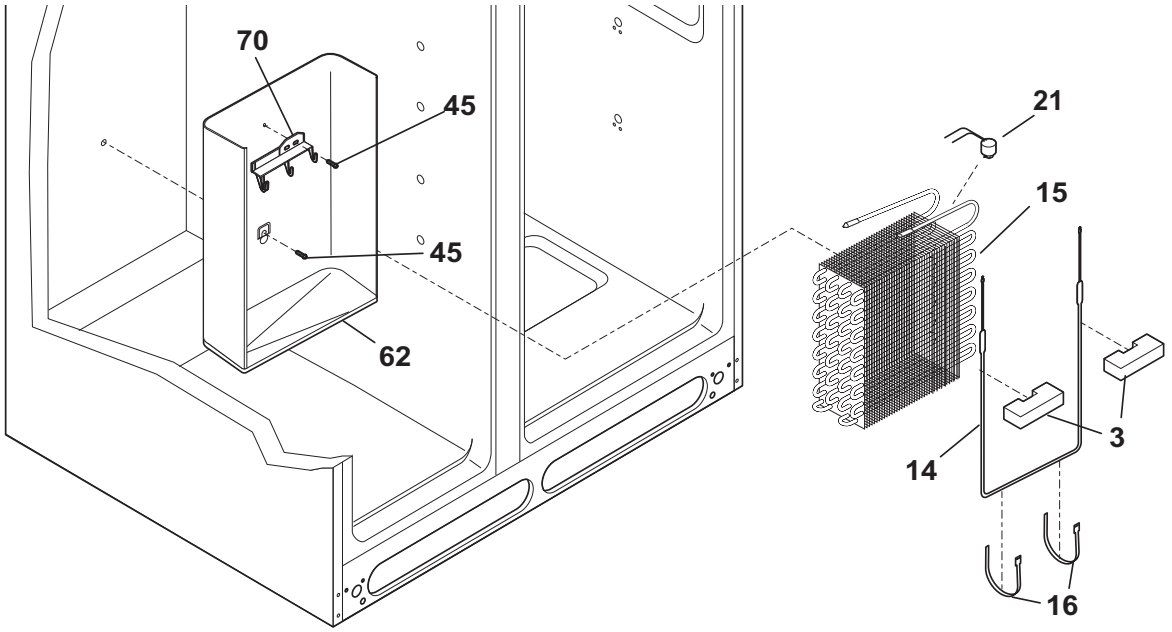
70
45
45
62
21
15
3
14
16

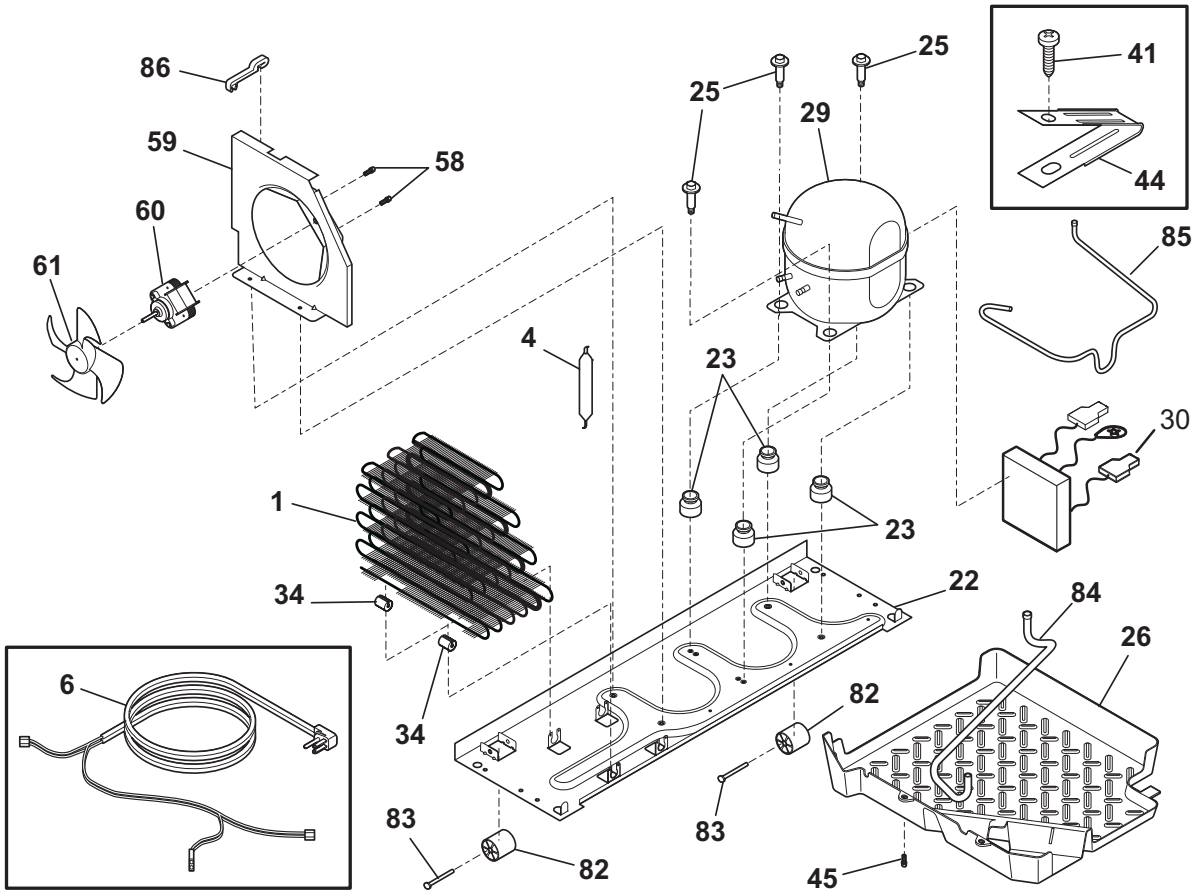
86
59
58
60
61
25
25
29
41
44
85
4
23
30
1
23
34
22
84
26
6
34
82
83
83
82
45
N58CACBAA11

SYSTEM

Model Index: A FGHC2342L (FGHC2342LF0)
B FGHC2342L (FGHC2342LF1)
C FGHC2342L (FGHC2342LF2)

POS. NO	PART NO.		DESCRIPTION
1	242039202	A B C	Condenser
3	218679607	A B C	Block-evap coil, styrofoam, (2)
4 #	218944001	A B C	Drier-filter, R134a System
6	241516901	A B C	Cord-service
6* #	242066402	A B C	Harness-wiring, machine compt
6* #	241519902	A B C	Harness-wiring
14 #	242044113	A B C	Heater-defrost
15 #	5303918480	A B C	Evaporator Kit
16	5308000110	A B C	Strap-evap/heater, aluminum, (2)
21	5303918214	A B C	Thermostat-defrost, kit
22	240330012	A B C	Base-compressor
22*	218252201	A B C	Screw, #8 truss hd, 10-32CA x 0.500
23	218513300	A B C	Grommet-compr mtg, (4)
25	240491503	A B C	Screw-compressor mtg, 1/4-28 x 1.16, (4)
26	241697501	A B C	Pan-defrost drain
29 #	5303918396	A B C	Compressor Kit
30 #	241577505	A B C	Invertor
34	240405201	A B C	Grommet, rubber, black, cond tube/wire
41	240555002	A B C	Screw-#8-32 X 3/8
44	215174700	A B C	Clamp-service cord, strain relief, galv steel
45	5304455650	A B C	Screw, hex washer head, 8-15A x 0.625, Low Profile
58	240569201	A B C	Screw, 8-18 x 0.500
59	241946106	A B C	Shroud-cond fan
59*	240346701	A B C	Tape-foam seal, shroud
59*	240359403	A B C	Screw-fan shroud, (2)
60	241584301	A B C	Motor-condenser fan
61	241639501	A B C	Blade-condenser fan
62	240429405	A B C	Trough-drain
70	218990801	A B C	Bracket-evap/cvr mtg
82	5304418225	A B C	Roller, compressor base, rear, (2)
83	5304455655	A B C	Rivet, flat head, 1/4 OD x 1-3/4, roller pin
84	241957901	A B C	Tube-drain, lower
85	241871501	A B C	Tube-connector, suction
86	240409302	A B C	Spacer-cond tube, black
*	241852501	A B C	Clip, wiring harness
* #	5303918327	A B C	Heat Exchanger Kit, suction line
*	5303918222	A B C	Hot Tube Repair Kit, service

Functional Parts
* Non-Illustrated Parts

ICE & WATER DISPENSER

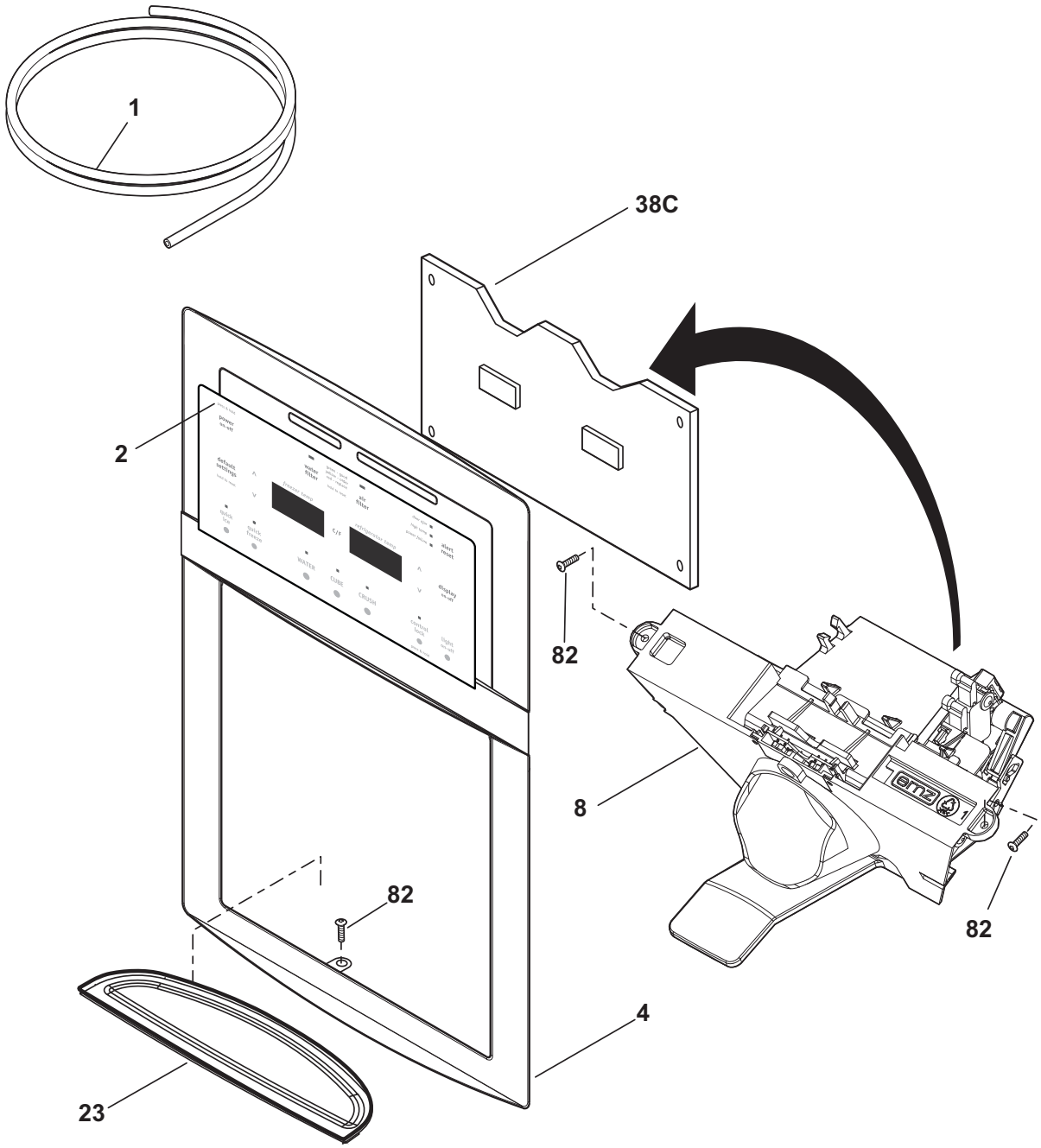

F58XFCAAA0

ICE & WATER DISPENSER

Model Index: A FGHC2342L (FGHC2342LF0)
B FGHC2342L (FGHC2342LF1)
C FGHC2342L (FGHC2342LF2)

POS. NO	PART NO.				DESCRIPTION
1	218976409	A	B	C	Tube, water, door
1*	218976421	A	B	C	Tube-water inlet, valve to door
1*	218976429	A	B	C	Tube-water inlet, 97.50", brown/tan
1*	218976915	A	B	C	Tube-water inlet, inlet valve, to I/M inlet
1*	240561702	A	B	C	Seal-water inlet, inlet valve, to ice maker
2	241973817	A	B	C	Switch Assembly, overlay, black
4	241946809	A	B	C	Cover-module
8	242074206	A	B	C	Module-dispenser
23	241947006	A	B	C	Drip Tray
38C#	241973702	A	B	C	Board-control
82	240363402	A	B	C	Screw, plask, #8-18 x .500
*	5303918371	A	B	C	Dispenser heater kit, 115

ICE CONTAINER

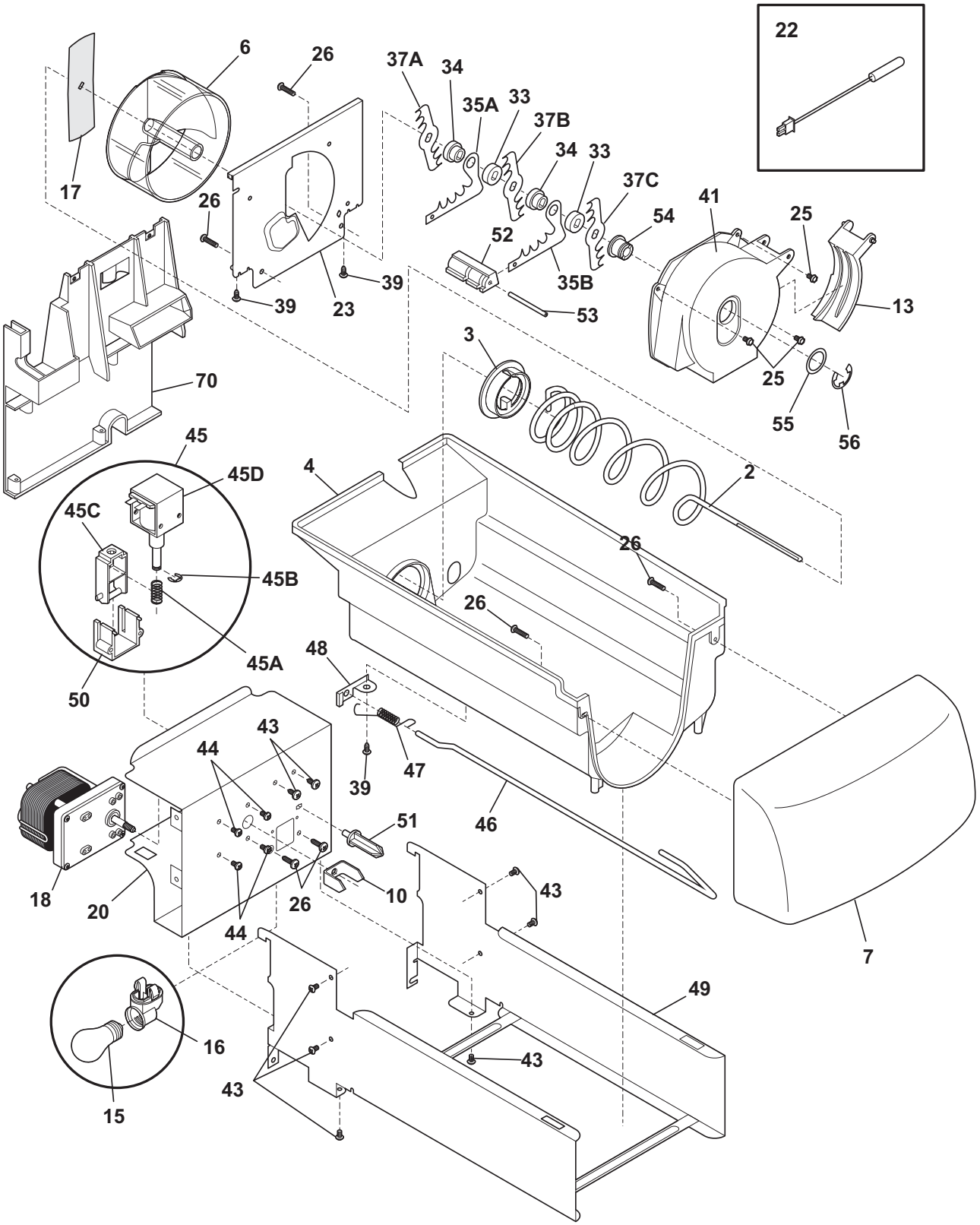

ICE CONTAINER

Model Index: A FGHC2342L (FGHC2342LF0)
B FGHC2342L (FGHC2342LF1)
C FGHC2342L (FGHC2342LF2)

POS. NO	PART NO.				DESCRIPTION
2	241684701	A	B	C	Auger-ice
3	241685201	A	B	C	Cam-drive
4	241515202	A	B	C	Container-ice, bucket only
6	241685101	A	B	C	Drum-ice disp
7	241515302	A	B	C	Front-ice container
10	241726501	A	B	C	Bar-drive
13	241685301	A	B	C	Gate
15	241555401	A	B	C	Light Bulb
16	241559801	A	B	C	Socket-light
17	241684501	A	B	C	Drive Blade
18 #	241676201	A	B	C	Motor-auger
18*	241522901	A	B	C	Harness-wiring, icmkr/container
20	241675502	A	B	C	Cover-motor
22	240597203	A	B	C	Sensor
22*	241519401	A	B	C	Clip, sensor
23	241684001	A	B	C	Plate-front
25	241690701	A	B	C	Screw, hex washer head, 8-32T x 0.375
26	215503203	A	B	C	Screw, cr pan hd, 10-16 x 0.500
33	241684801	A	B	C	Spacer
34	241689801	A	B	C	Spacer
35A	241684301	A	B	C	Fixed Blade, round
35B	241684201	A	B	C	Fixed Blade, square
37A	241684101	A	B	C	Blade, crusher #1
37B	241684102	A	B	C	Blade, crusher #2
37C	241684103	A	B	C	Blade, crusher #3
39	241690501	A	B	C	Screw
41	241685601	A	B	C	Housing-crusher
43	218359202	A	B	C	Screw, pan head, 8-32 x 0.250
44	241842101	A	B	C	Screw, 8-32 x 1/4
45 #	241675701	A	B	C	Solenoid Assy, 115V
45A	241675901	A	B	C	Spring-solenoid
45B	241676001	A	B	C	E-Ring-solenoid
45C	241676101	A	B	C	Actuator-solenoid
45D#	241675801	A	B	C	Solenoid, 115V
46	241684402	A	B	C	Control Rod
47	241731801	A	B	C	Spring-control rod
48	241684602	A	B	C	Bracket-control rod
49	241676501	A	B	C	Rail Assy
50	241675601	A	B	C	Guide-solenoid
51	241676301	A	B	C	Rotation Stop
52	241684901	A	B	C	Spacer-fixed blades
53	241690402	A	B	C	Pin-spiral, fixed blades
54	241685001	A	B	C	Nut-auger
55	241690306	A	B	C	Washer
56	241690201	A	B	C	E-ring
70	241504601	A	B	C	Plate-mounting
70*	215005101	A	B	C	Screw, hanger/rlr mtg, 8-10 x 7/16
70*	241551602	A	B	C	Screw, hex head, 8-18B x 0.875
70*	241716801	A	B	C	Clip
*	240562101	A	B	C	Insulator
*	241914703	A	B	C	Ice Container Assy, w/moving parts

Functional Parts
* Non-Illustrated Parts

ICE MAKER

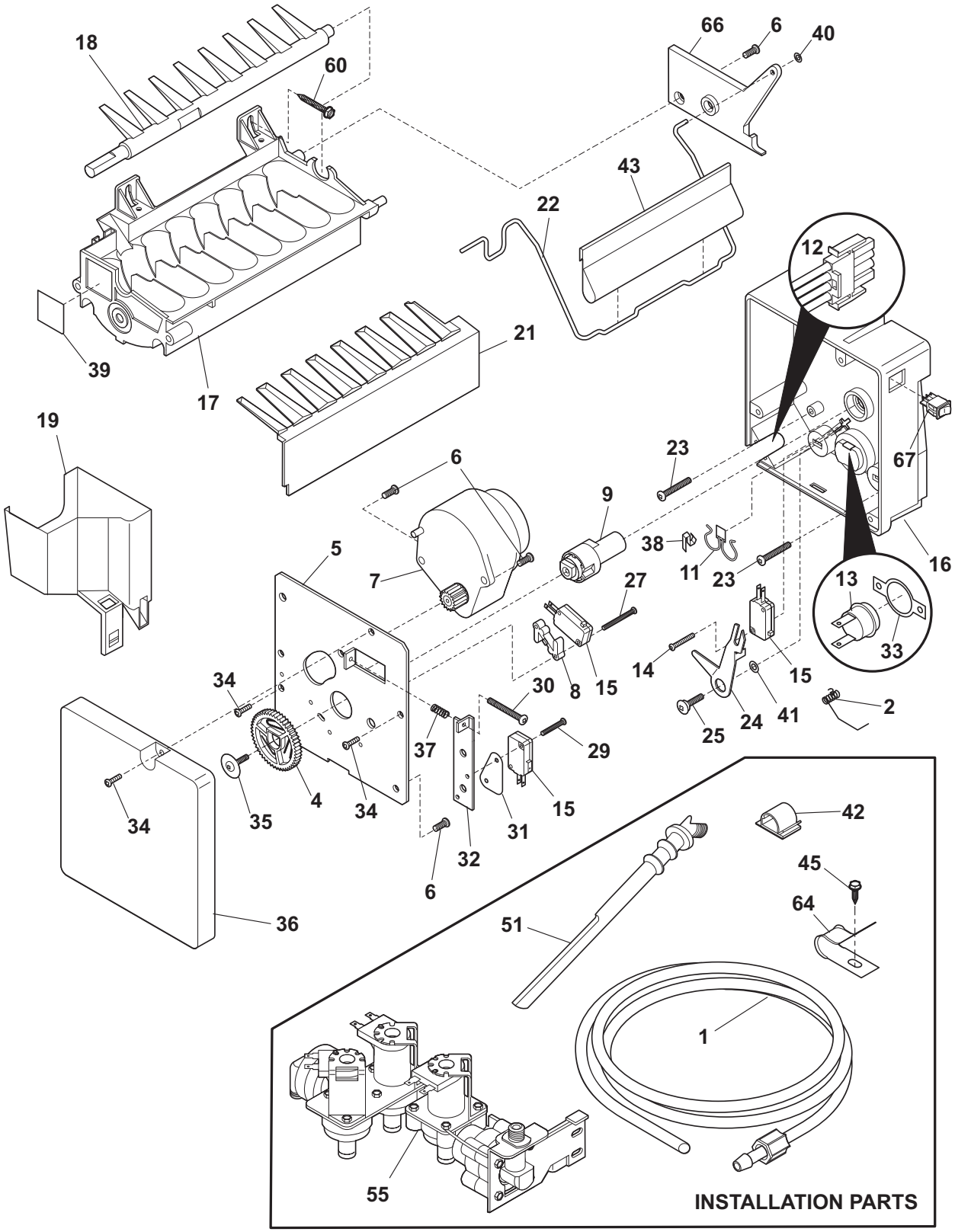

N58I115TServo

ICE MAKER

Model Index: A FGHC2342L (FGHC2342LF0)
B FGHC2342L (FGHC2342LF1)
C FGHC2342L (FGHC2342LF2)

POS. NO	PART NO.		DESCRIPTION
1	218976409	A B C	Tube, water, door
1*	218976421	A B C	Tube-water inlet, valve to door
1*	218976429	A B C	Tube-water inlet, 97.50", brown/tan
1*	218976915	A B C	Tube-water inlet, inlet valve, to I/M inlet
1*	240561702	A B C	Seal-water inlet, inlet valve, to ice maker
2	5304459922	A B C	Spring, shut-off arm
4	5304458380	A B C	Gear
5	5304458383	A B C	Plate-mounting
6	5304458386	A B C	Screw
7 #	5304458382	A B C	Motor-ice maker Svo
8	5304458388	A B C	Spacer-hold switch
9	5304456662	A B C	Cam
11 #	5304458400	A B C	Thermal Cutoff, ice maker
12	5304458379	A B C	Harness-wiring
13	5304456665	A B C	Thermostat, ice maker
14	5304458384	A B C	Screw
15 #	5304456667	A B C	Switch-micro, (3)
16	5304458395	A B C	Housing, control
17	5304456669	A B C	Mold-ice maker, w/therm cut off
18	5304458377	A B C	Ejector-ice
18*	241522901	A B C	Harness-wiring, icmkr/container
19	5304458378	A B C	Cup-water inlet
21	5304458390	A B C	Ice Stripper
22	5304458375	A B C	Shut-off Arm
23	5304458394	A B C	Screw
24	5304458391	A B C	Lever Arm
25	5304456676	A B C	Screw, M 4x12.8 #2, lever arm/sprt
27	5304458385	A B C	Screw
29	5304458393	A B C	Screw
31	5304458381	A B C	Insulator
32	5304456681	A B C	Plate-valve switch
33	5304458403	A B C	Retainer-thermostat
34	5304456678	A B C	Screw, M 3x12 #3, (2)
35	5304456684	A B C	Screw
36	5304458376	A B C	Cover-ice maker
37	5304456682	A B C	Spring, timing adjust
38	5304458398	A B C	Clip
39	5304458399	A B C	Conductor-heat
40	5304458401	A B C	Clip-retainer
41	5304456689	A B C	Washer, nylon
42	218515403	A B C	Clip-grille
43	241720601	A B C	Extension
45	5304455650	A B C	Screw, hex washer head, 8-15A x 0.625, Low Profile
51	241796402	A B C	Tube-water fill, extension
51*	240561701	A B C	Seal-water inlet, inlet valve, to ice maker
55 #	241734301	A B C	Valve-water, triple solenoid
55*	218709101	A B C	Screw, hex head, 10-32 x 0.500
55*	240363602	A B C	Screw-shoulder

Functional Parts
* Non-Illustrated Parts

ICE MAKER

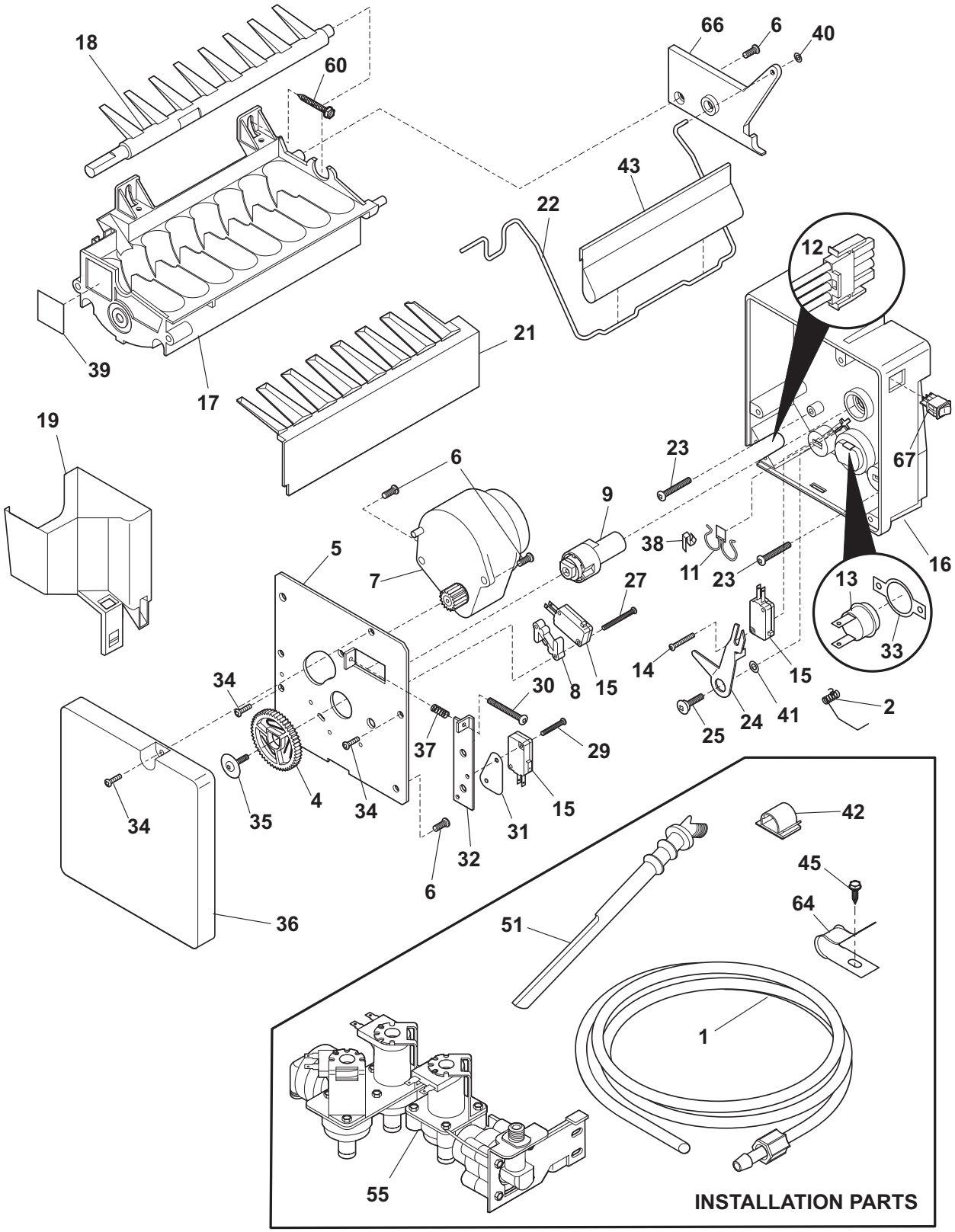

N58I115TServo

ICE MAKER

Model Index: A FGHC2342L (FGHC2342LF0)
B FGHC2342L (FGHC2342LF1)
C FGHC2342L (FGHC2342LF2)

POS. NO	PART NO.				DESCRIPTION
55*	240542901	A	B	C	Cap-water valve
60	5304455651	A	B	C	Screw, hex washer head, 8-15A x 0.500
64	5304455846	A	B	C	Clamp, .31 ID, steel, water tube
66	5304458374	A	B	C	Bracket-ice maker
67	5304458392	A	B	C	Switch-on/off
*	241583301	A	B	C	Deflector-air, ice maker
*	242103001	A	B	C	Connector-water, straight
*	5304456660	A	B	C	Screw, M 4x6 #2
*	5304458389	A	B	C	Screw
*#	241709801	A	B	C	Ice Maker, radius cube, 115 V, no instl parts

WIRING SCHEMATIC

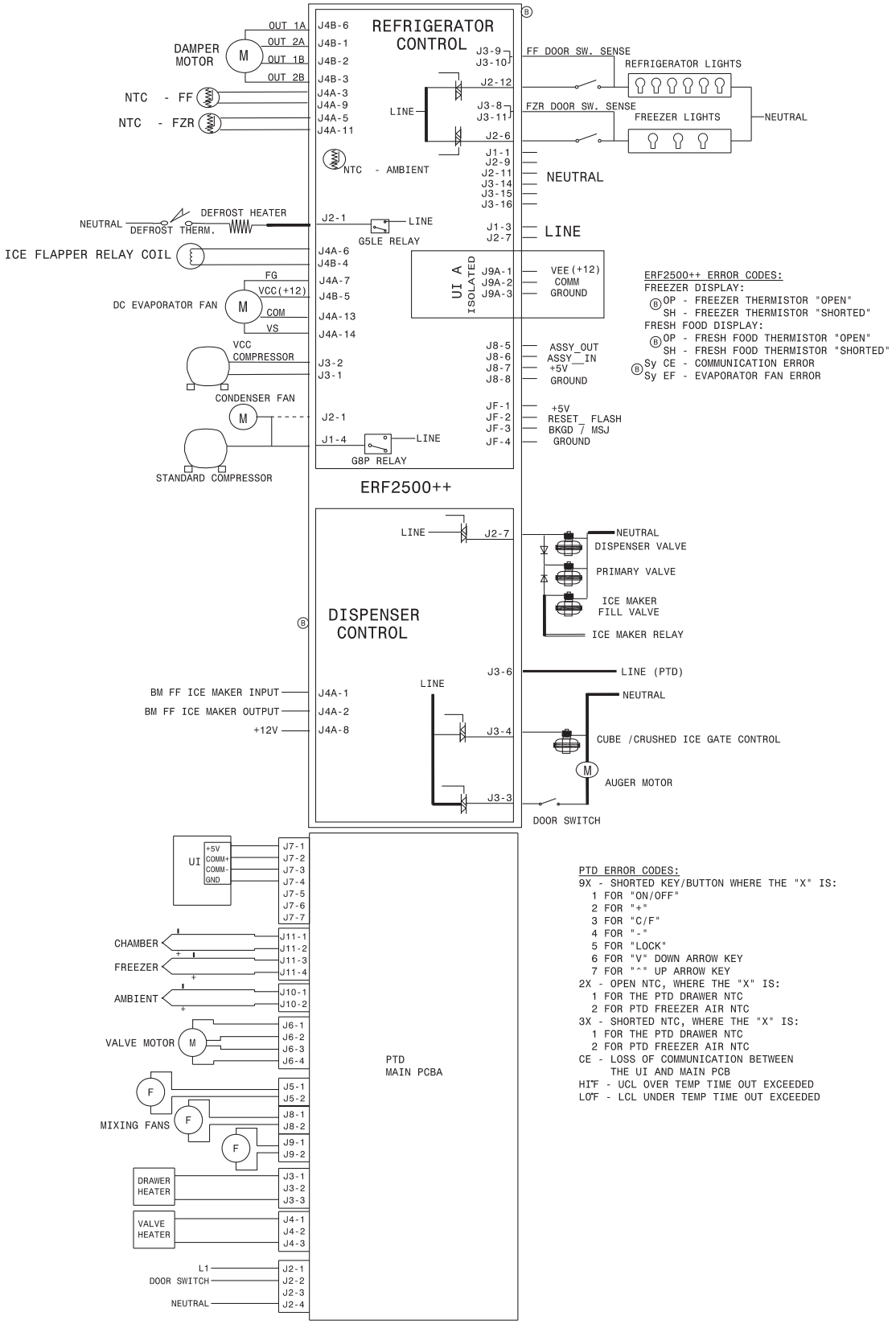
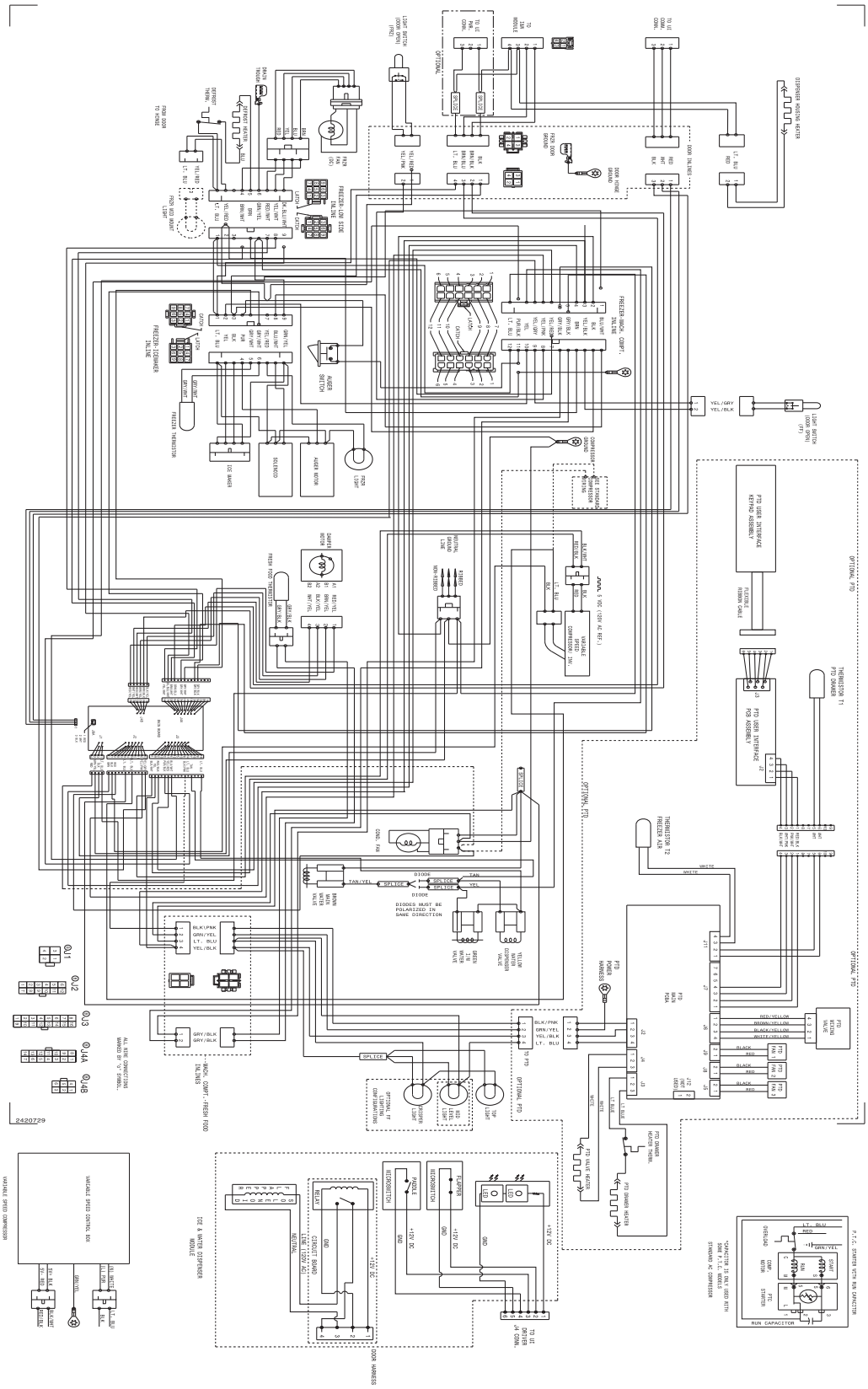
WIRING DIAGRAM